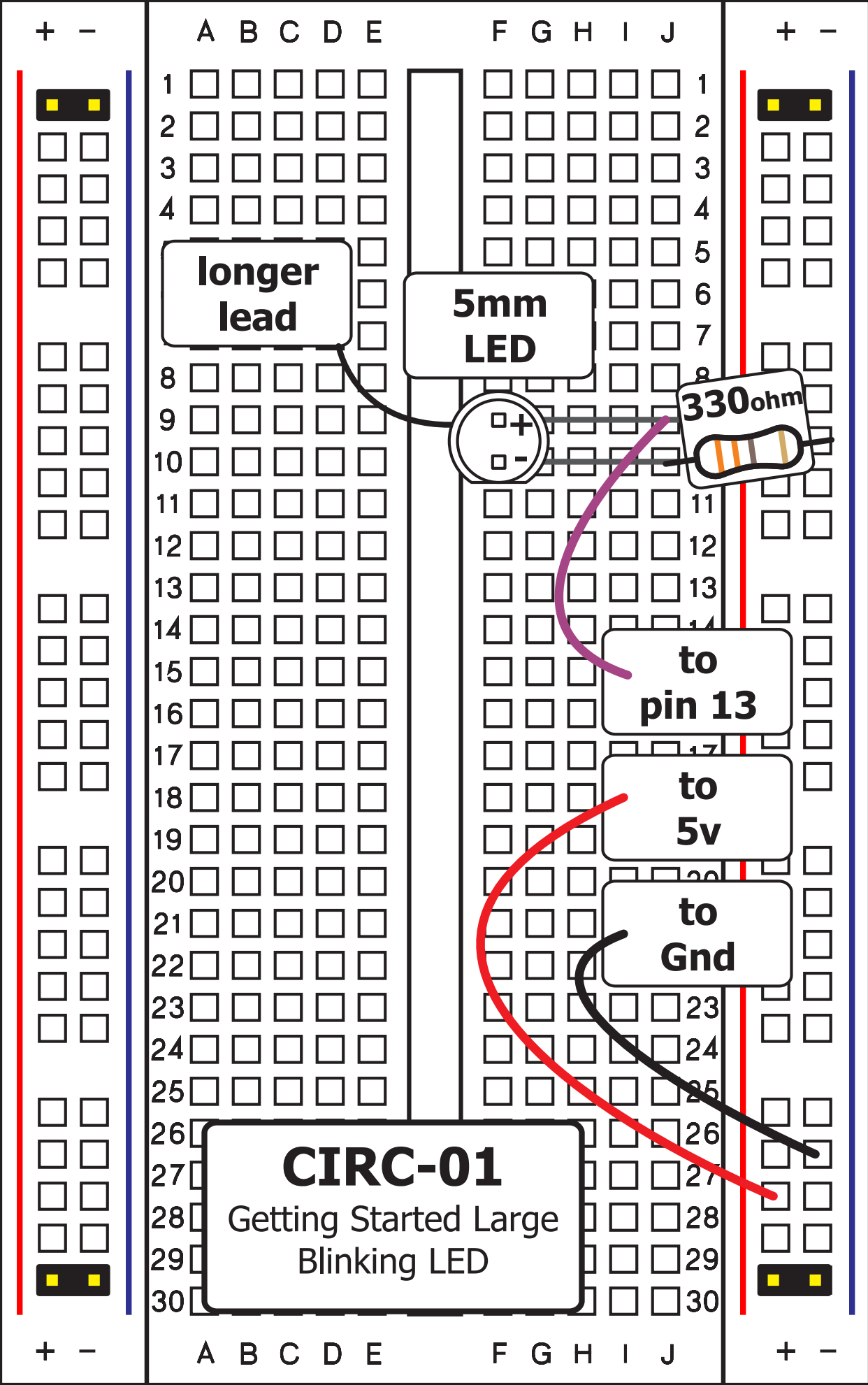
longer lead
5mm LED
330ohm
to pin 13
to 5v
to Gnd
CIRC-01
Getting Started Large Blinking LED

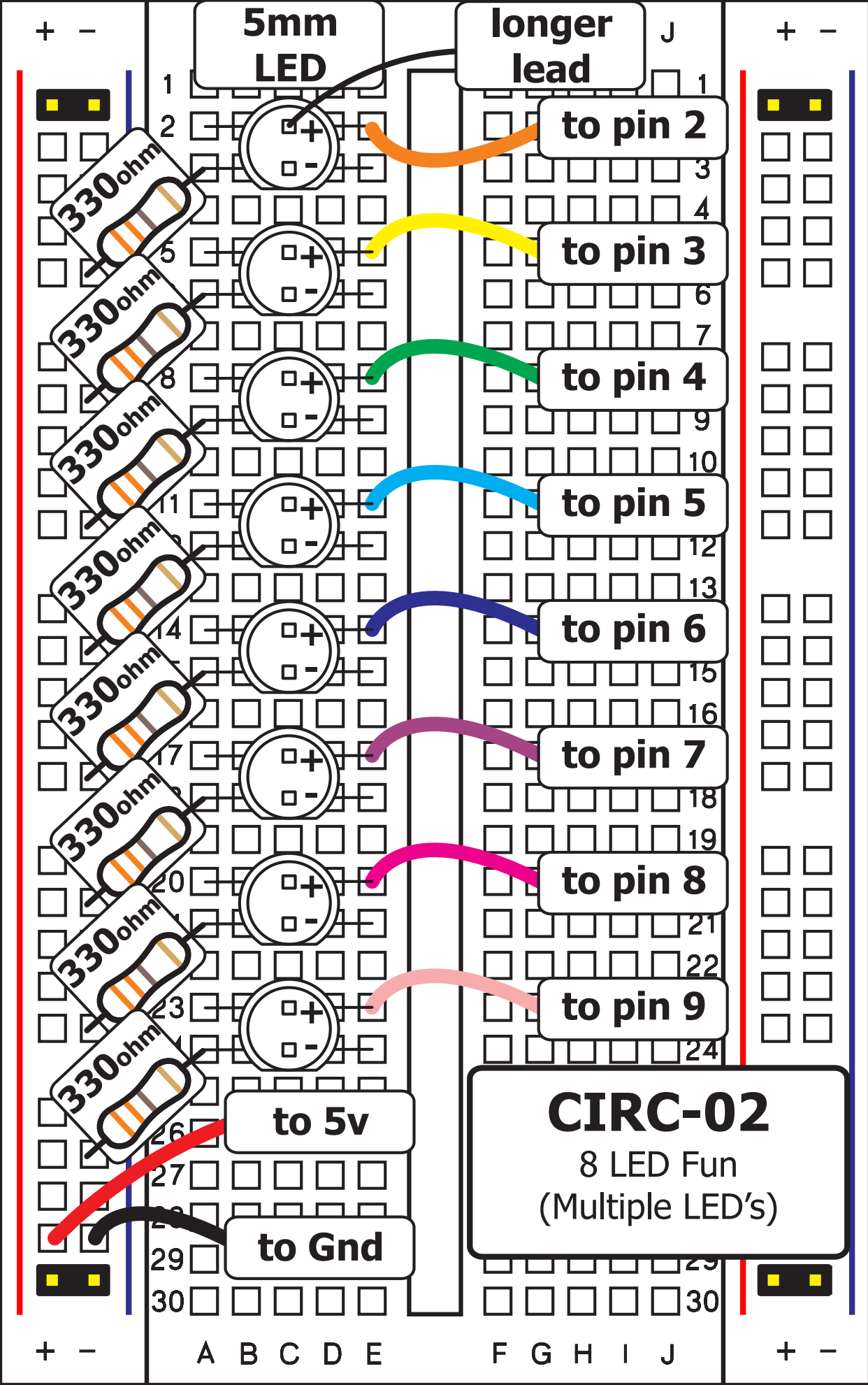
5mm LED
longer lead
to pin 2
to pin 3
to pin 4
to pin 5
to pin 6
to pin 7
to pin 8
to pin 9
330ohm
330ohm
330ohm
330ohm
330ohm
330ohm
330ohm
330ohm
to 5v
to Gnd
CIRC-02
8 LED Fun
(Multiple LED's)
A B C D E
F G H I J

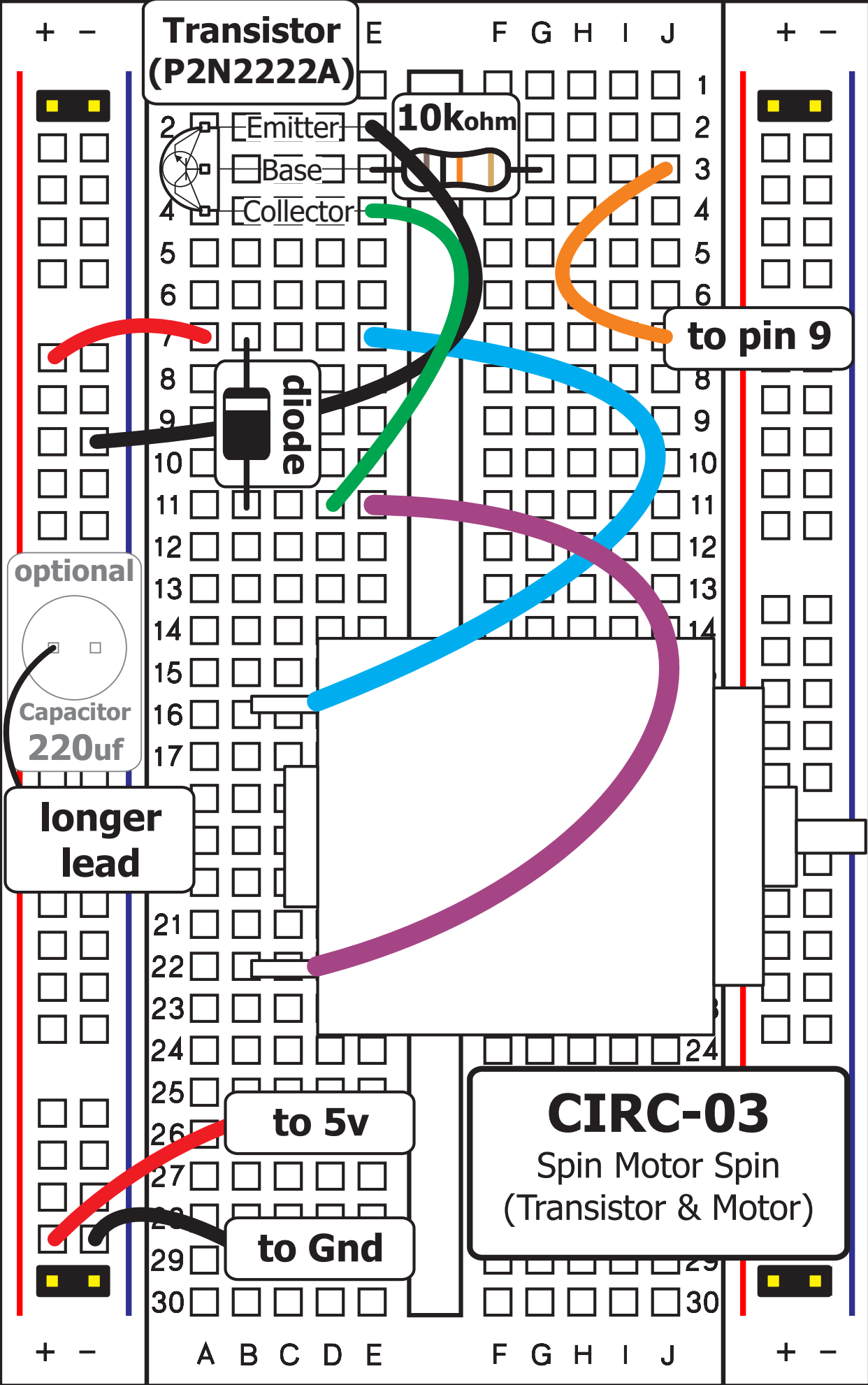
Transistor
(P2N2222A)
Emitter
Base
Collector
10Kohm
diode
to pin 9
optional
Capacitor
220uf
longer
lead
to 5v
to Gnd
CIRC-03
Spin Motor Spin
(Transistor & Motor)

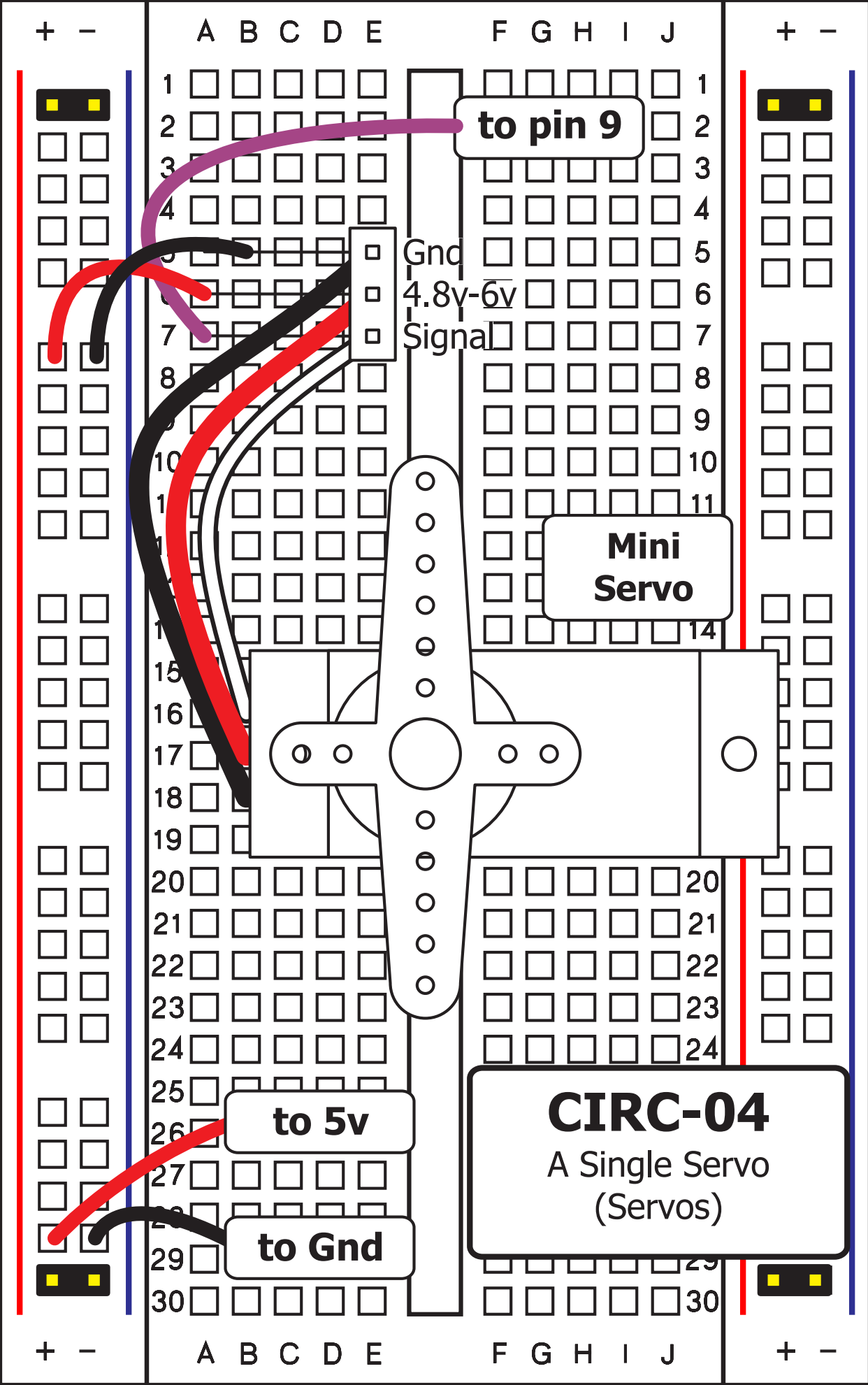
to pin 9
Gnd
4.8v-6v
Signal
Mini Servo
to 5v
to Gnd
CIRC-04
A Single Servo
(Servos)

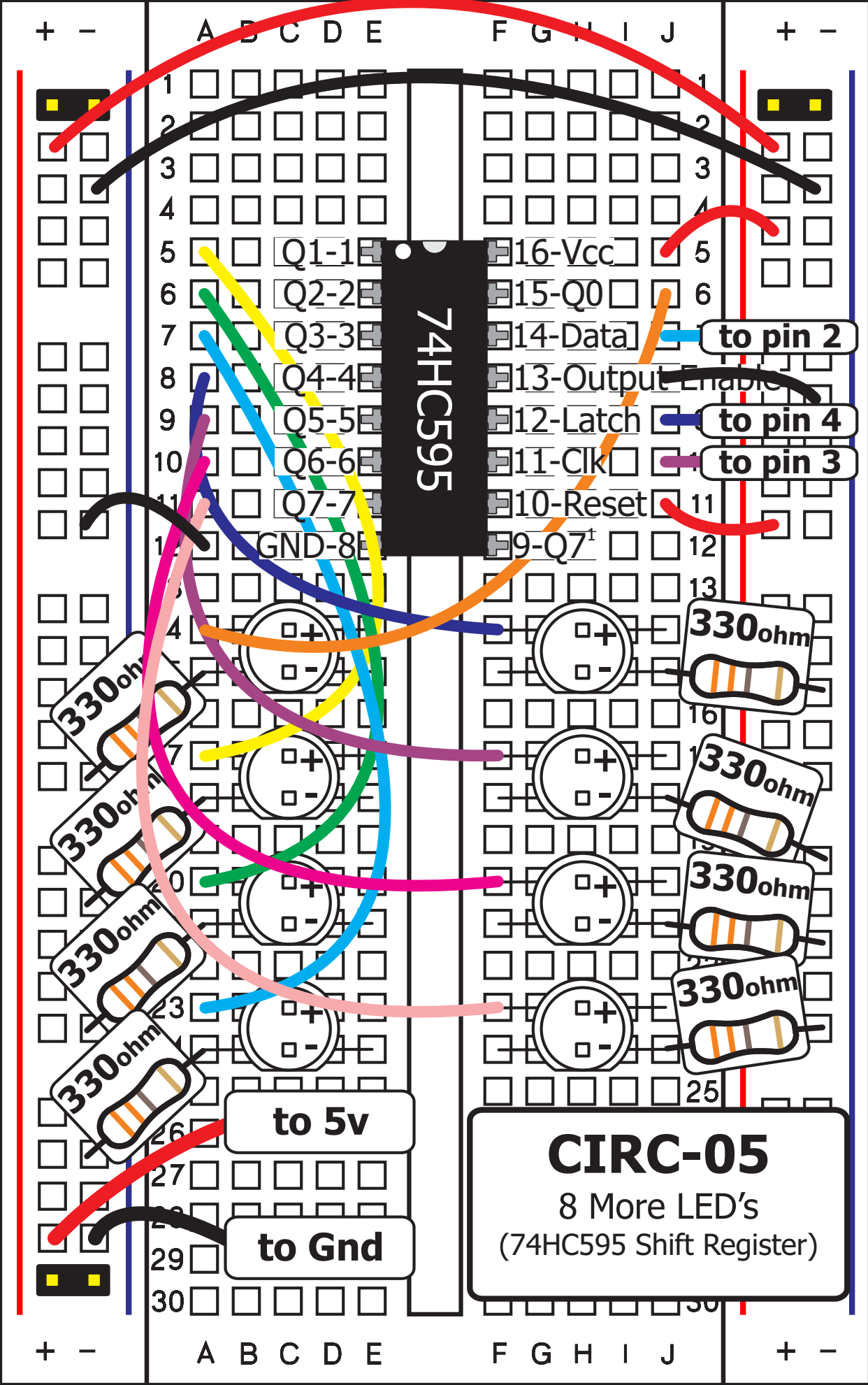
74HC595
Q1-1
Q2-2
Q3-3
Q4-4
Q5-5
Q6-6
Q7-7
GND-8
16-Vcc
15-Q0
14-Data
13-Output Enable
12-Latch
11-Clk
10-Reset
9-Q7'
to pin 2
to pin 4
to pin 3
330ohm
330ohm
330ohm
330ohm
330ohm
330ohm
to 5v
to Gnd
CIRC-05
8 More LED's
(74HC595 Shift Register)

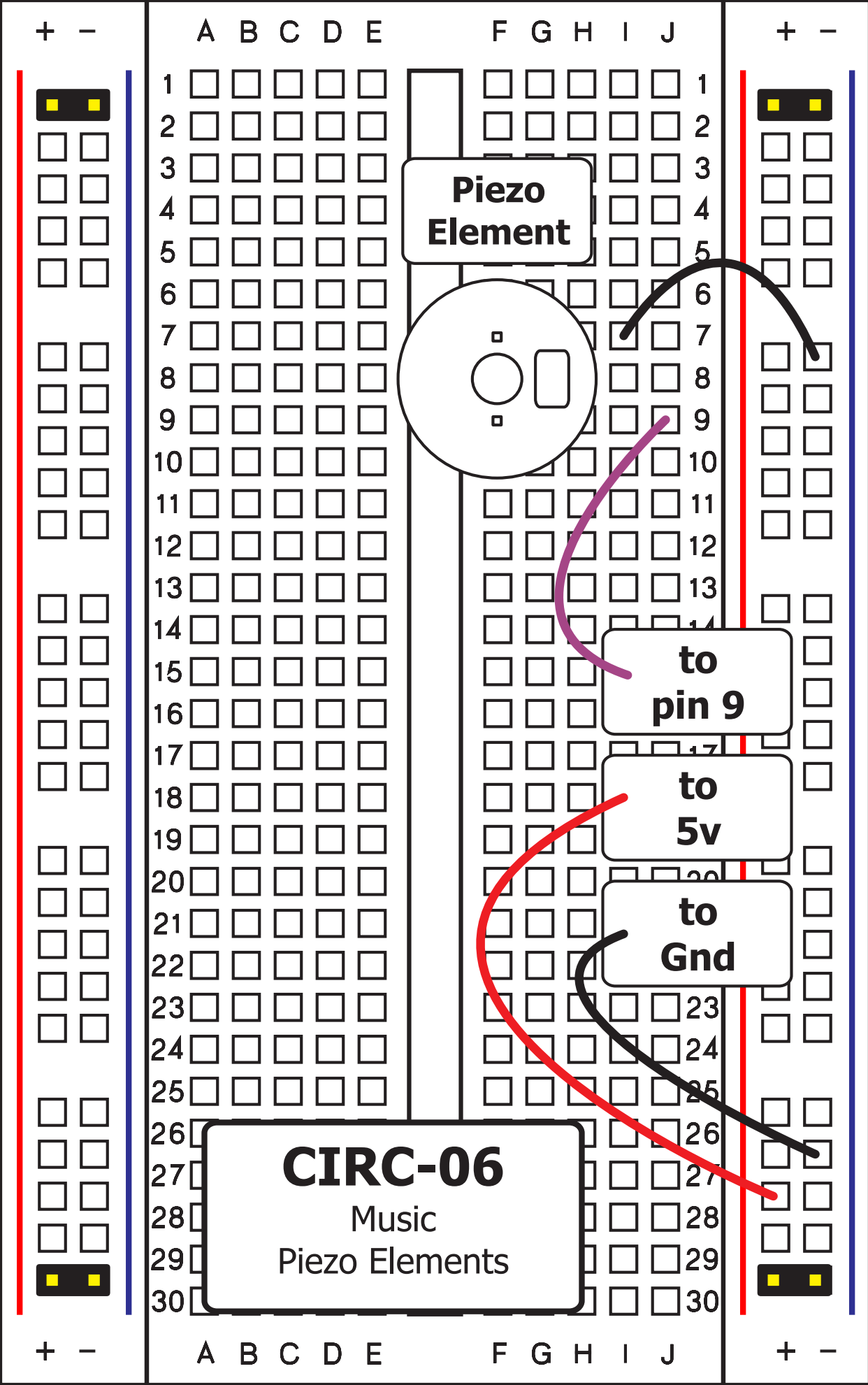
Piezo Element
to pin 9
to 5v
to Gnd
CIRC-06
Music
Piezo Elements

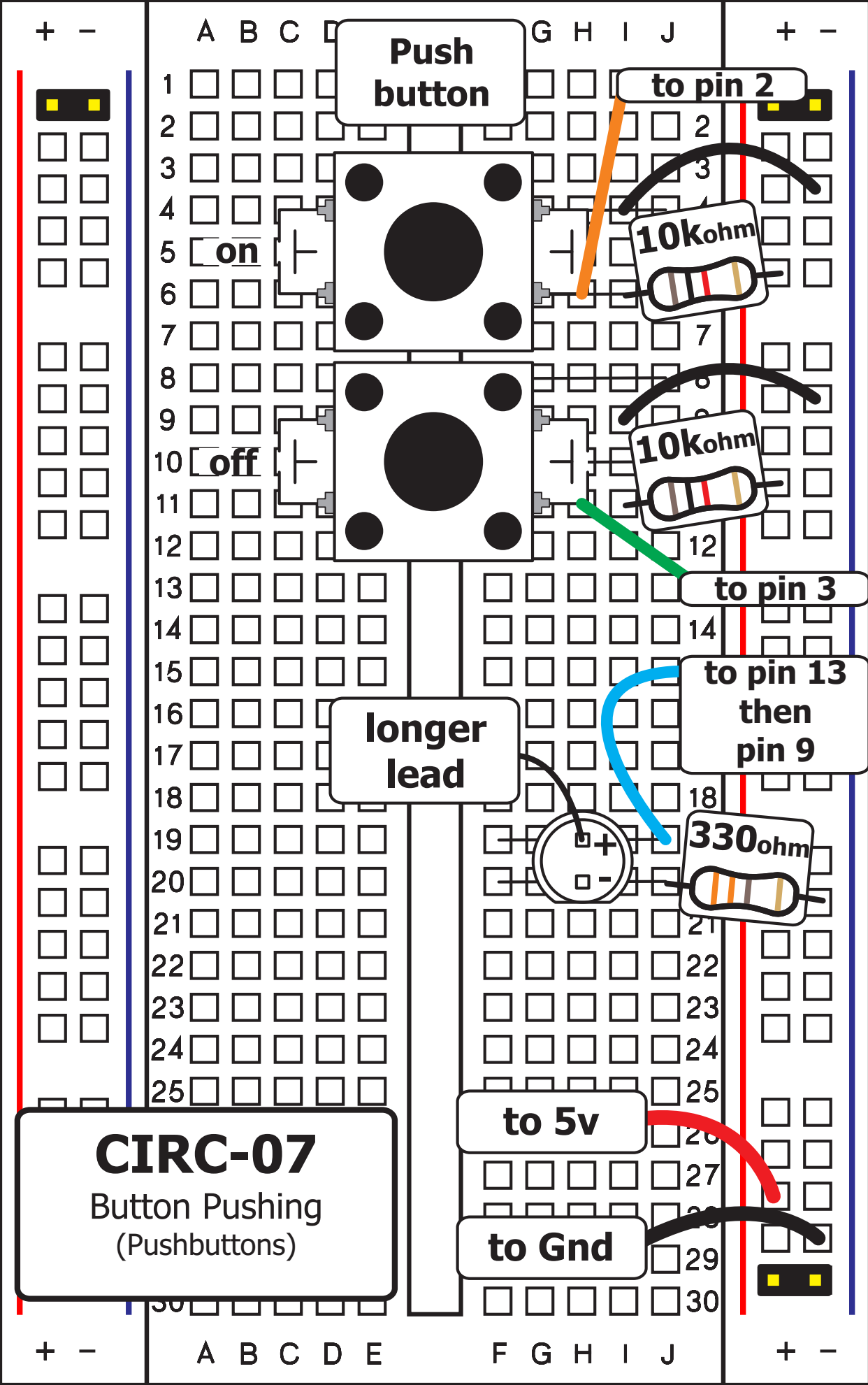
Push button
to pin 2
10kohm
on
10kohm
off
to pin 3
to pin 13 then pin 9
longer lead
330ohm
to 5v
to Gnd
CIRC-07
Button Pushing
(Pushbuttons)

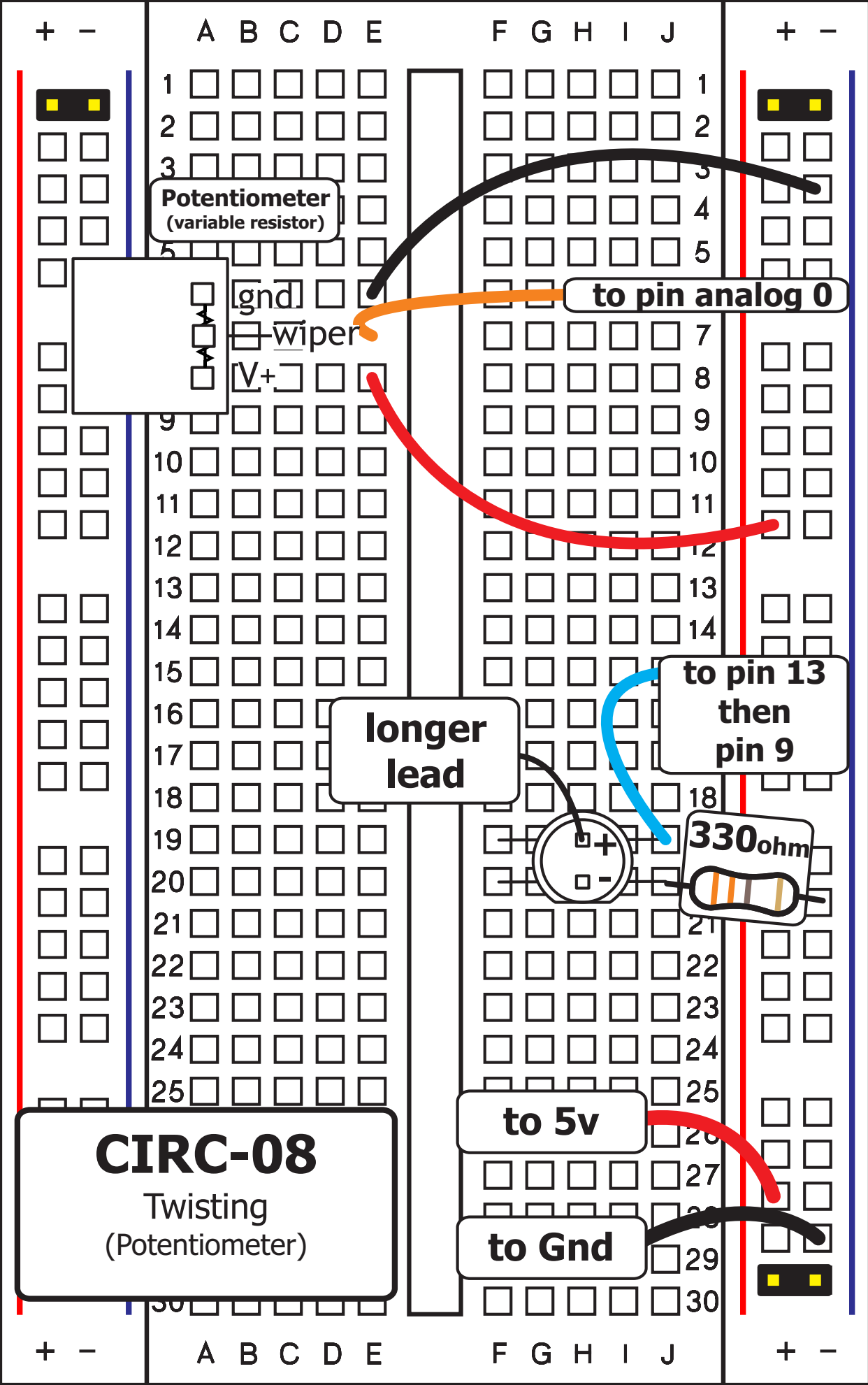
Potentiometer
(variable resistor)
gnd
wiper
V+
to pin analog 0
longer lead
to pin 13 then pin 9
330ohm
to 5v
to Gnd
CIRC-08
Twisting
(Potentiometer)

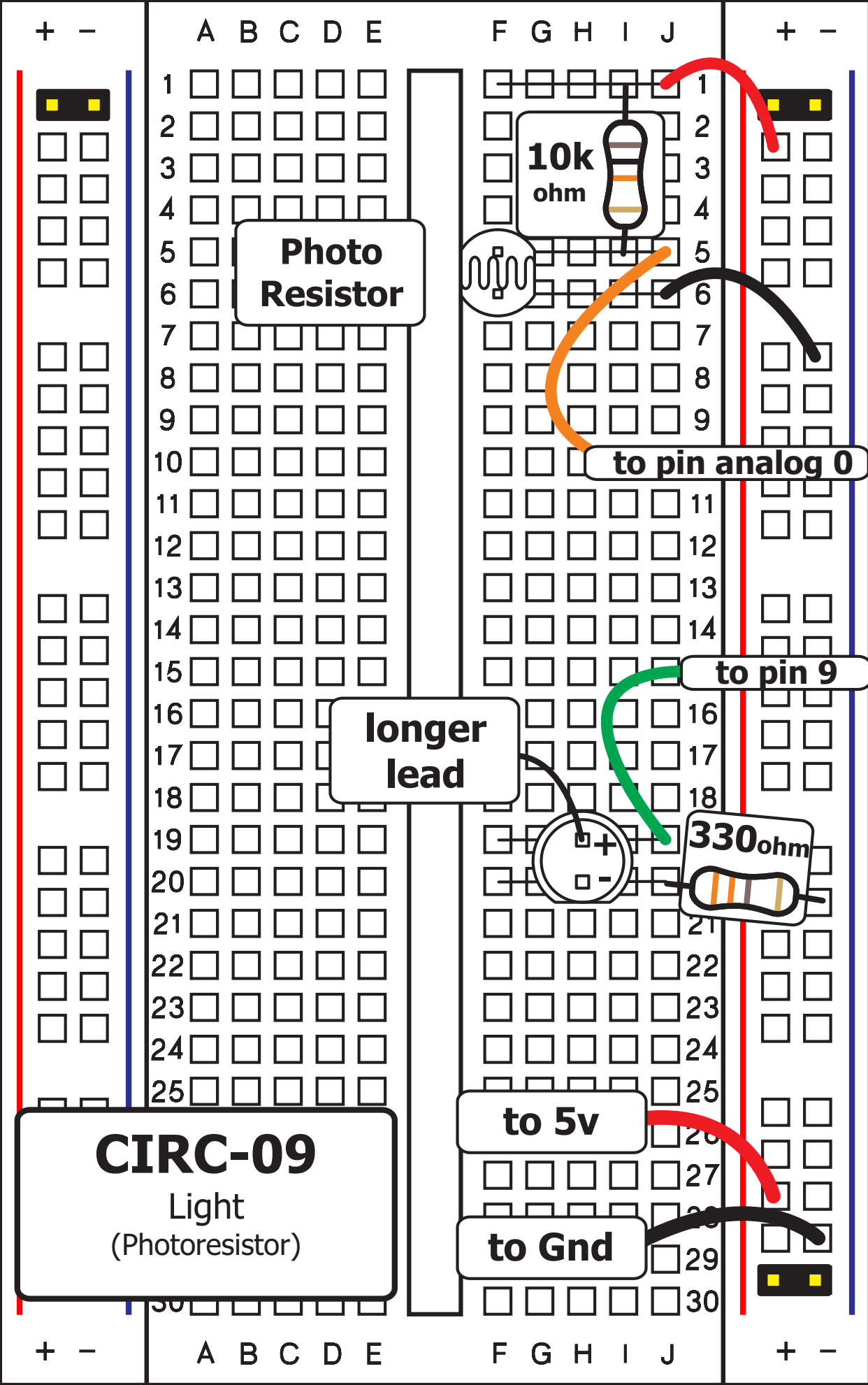
10k
ohm
Photo
Resistor
to pin analog 0
to pin 9
longer
lead
330ohm
to 5v
to Gnd
CIRC-09
Light
(Photoresistor)

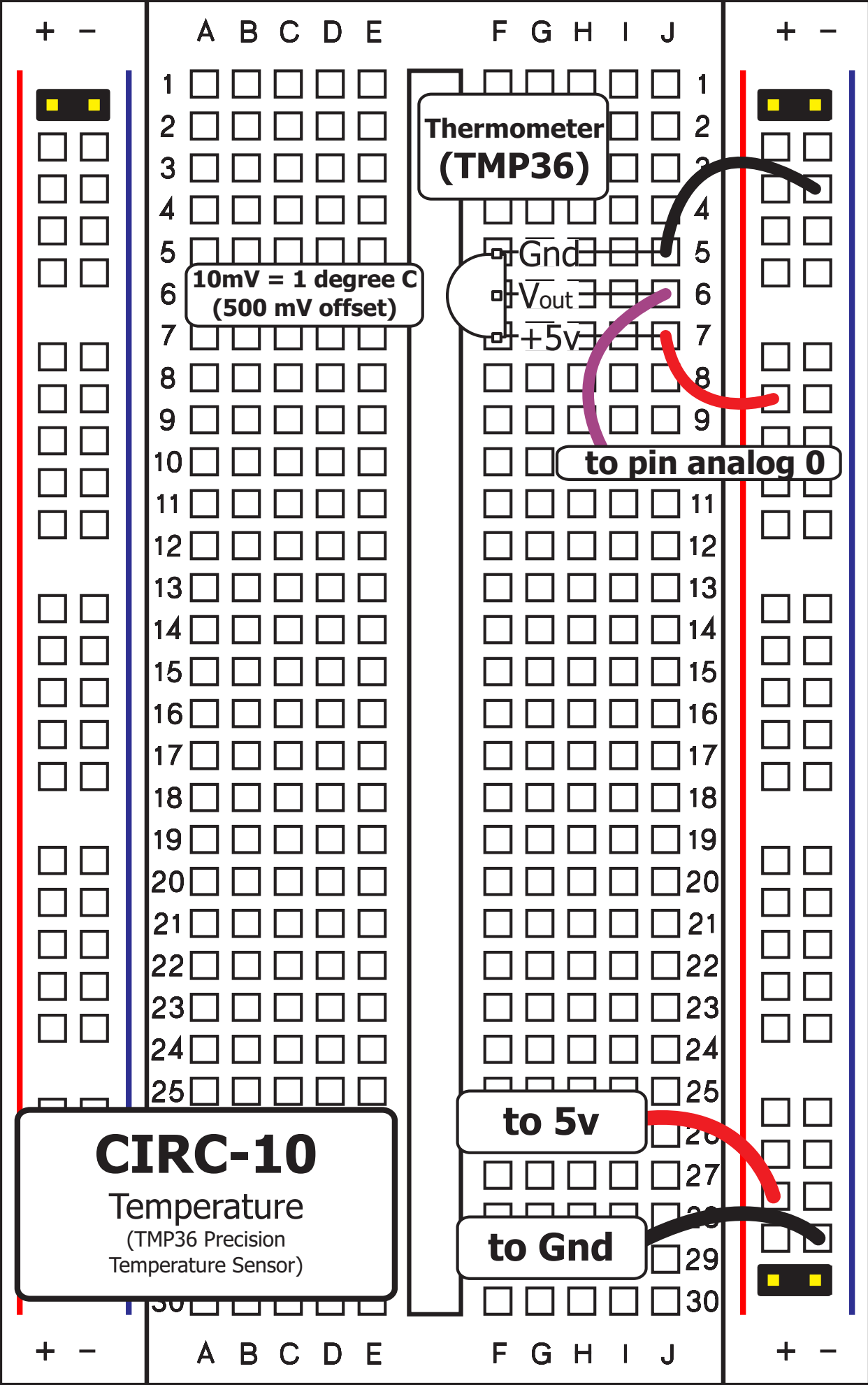
Thermometer
(TMP36)
Gnd
Vout
+5v
10mV = 1 degree C
(500 mV offset)
to pin analog 0
to 5v
to Gnd
CIRC-10
Temperature
(TMP36 Precision
Temperature Sensor)

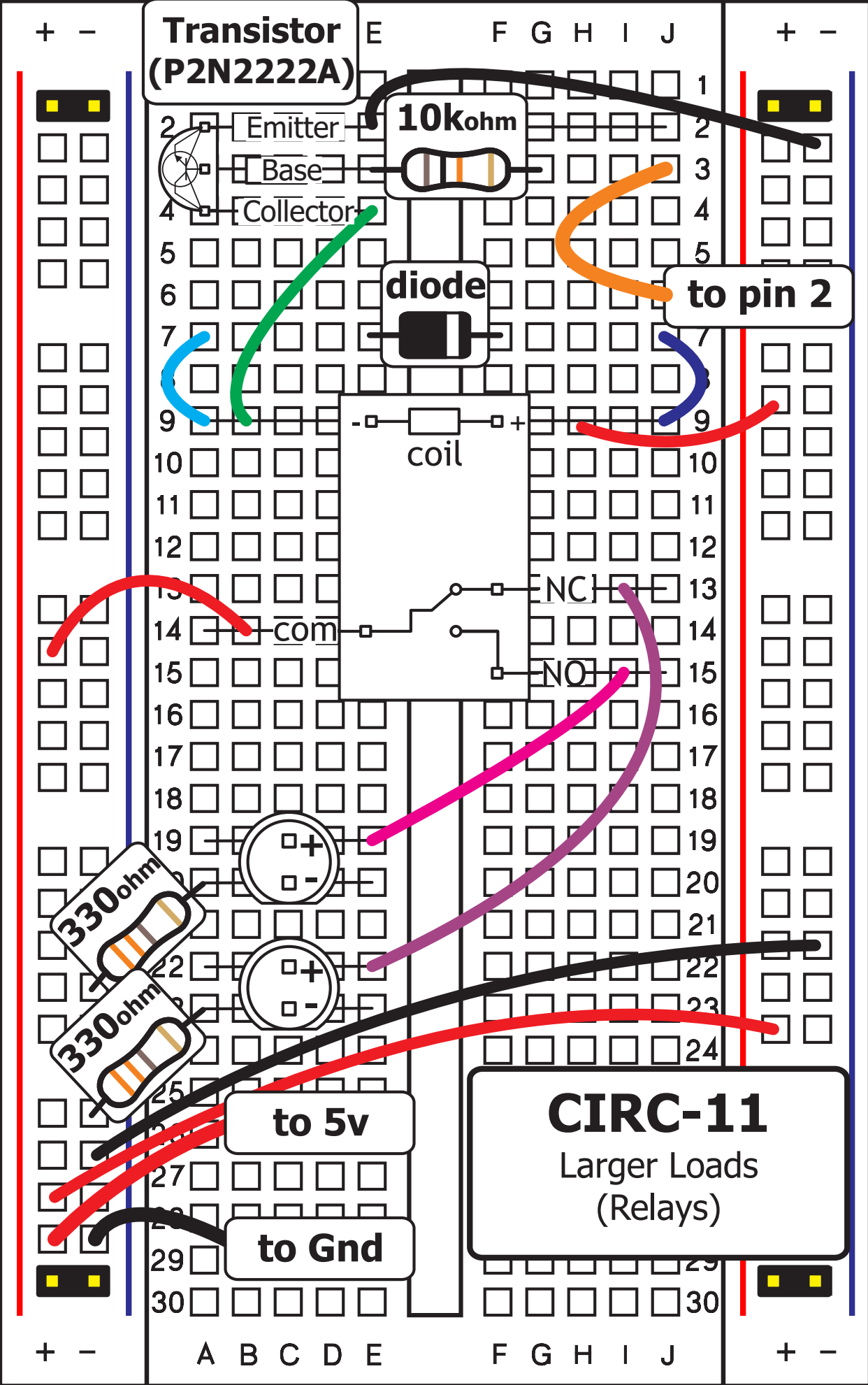
Transistor
(P2N2222A)
Emitter
Base
Collector
10kohm
diode
to pin 2
coil
NC
com
NO
330ohm
330ohm
to 5v
to Gnd
CIRC-11
Larger Loads
(Relays)

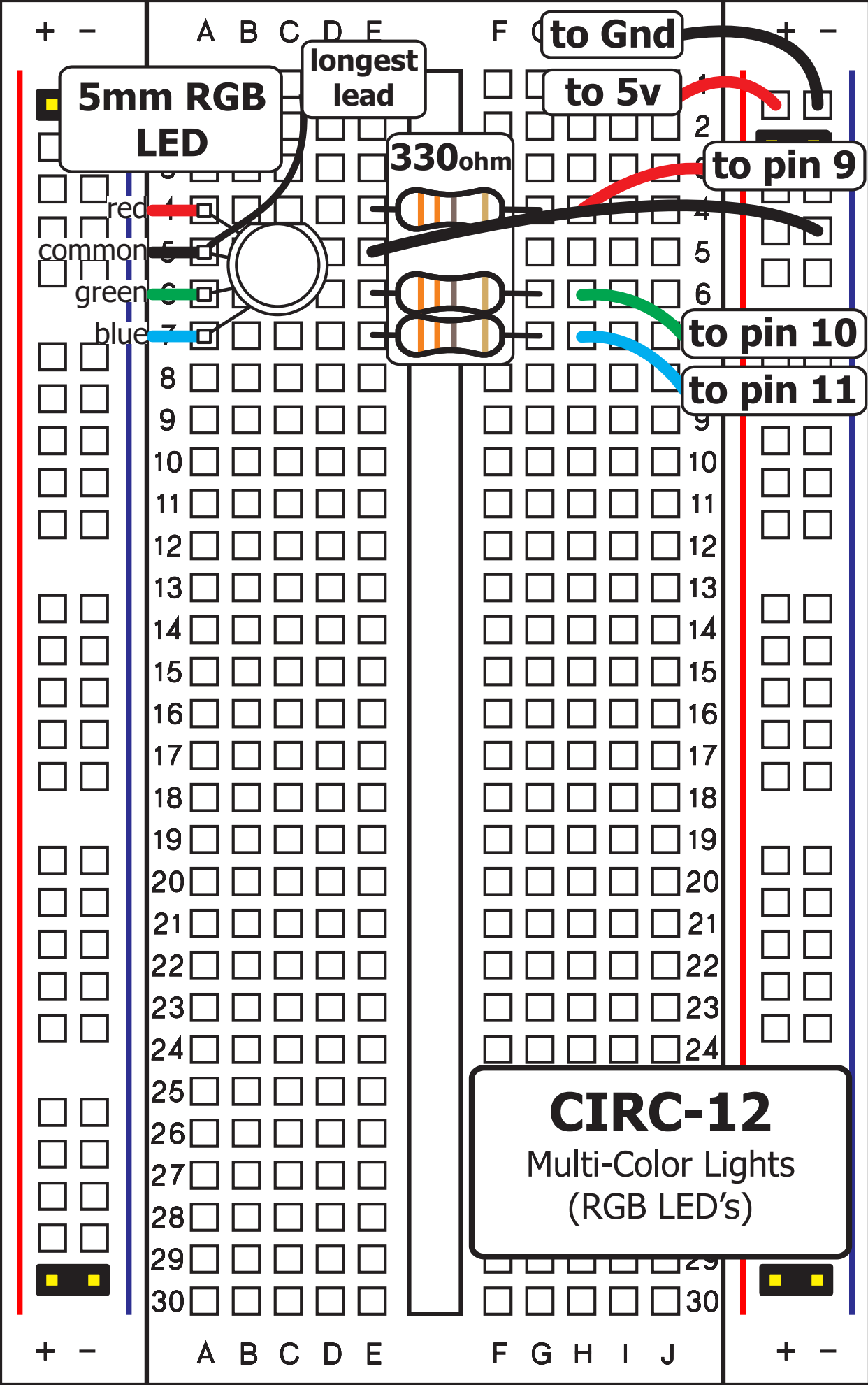
5mm RGB LED
longest lead
330ohm
to Gnd
to 5v
to pin 9
to pin 10
to pin 11
red
common
green
blue
CIRC-12
Multi-Color Lights
(RGB LED's)

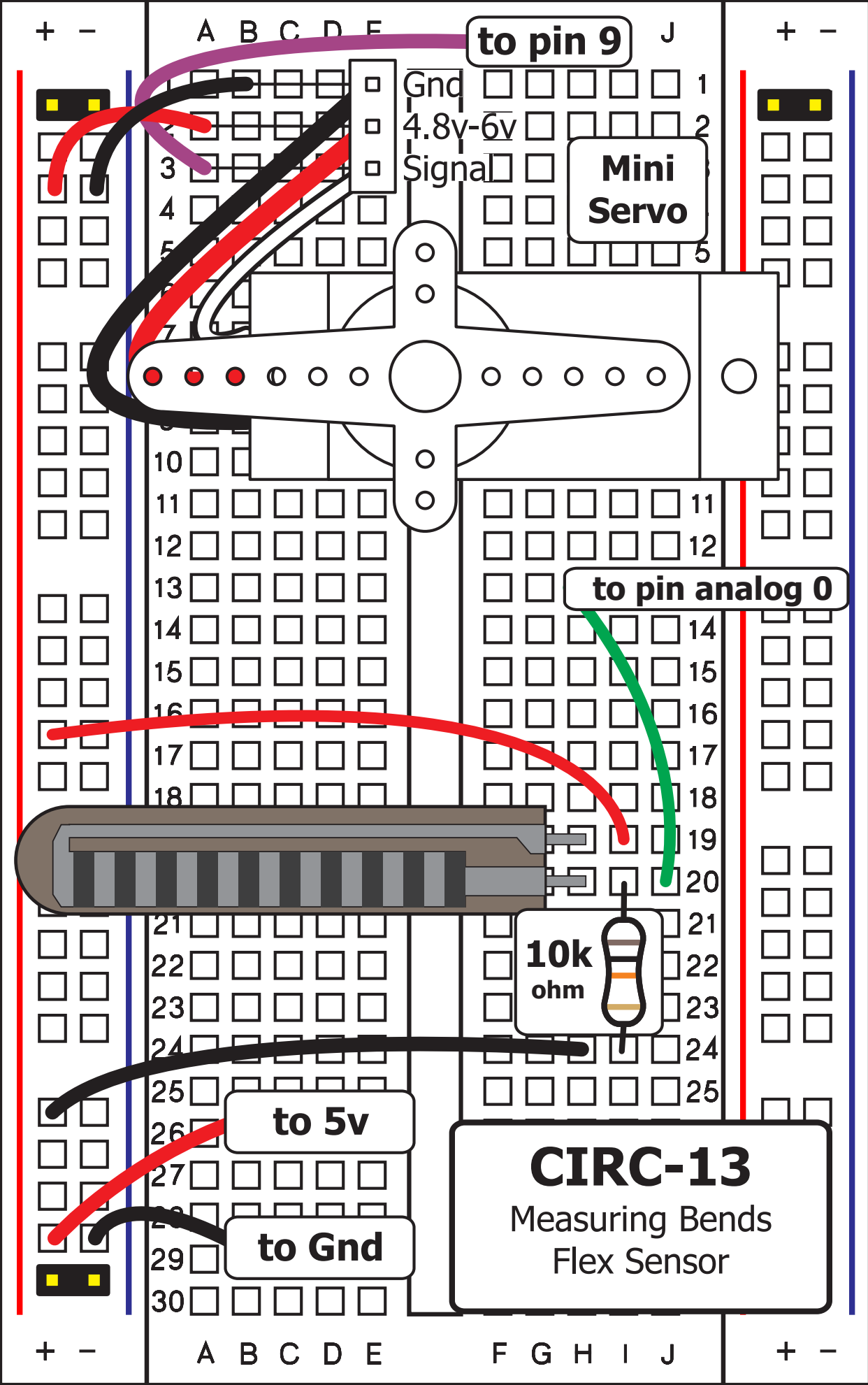
to pin 9
Gnd
4.8v-6v
Signal
Mini Servo
to pin analog 0
10k ohm
to 5v
to Gnd
CIRC-13
Measuring Bends
Flex Sensor

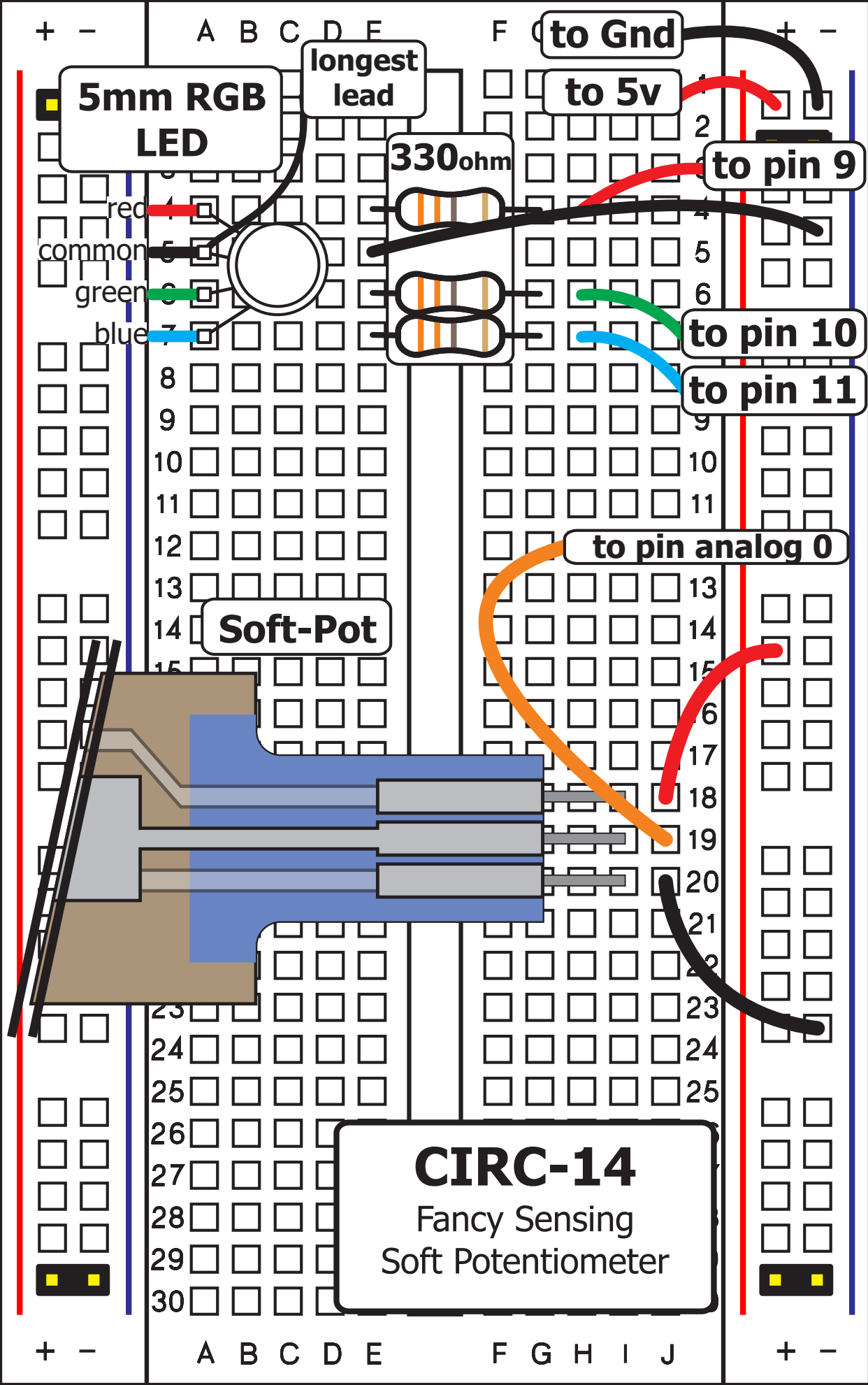
5mm RGB LED
longest lead
330ohm
to Gnd
to 5v
to pin 9
to pin 10
to pin 11
to pin analog 0
Soft-Pot
red
common
green
blue
CIRC-14
Fancy Sensing
Soft Potentiometer